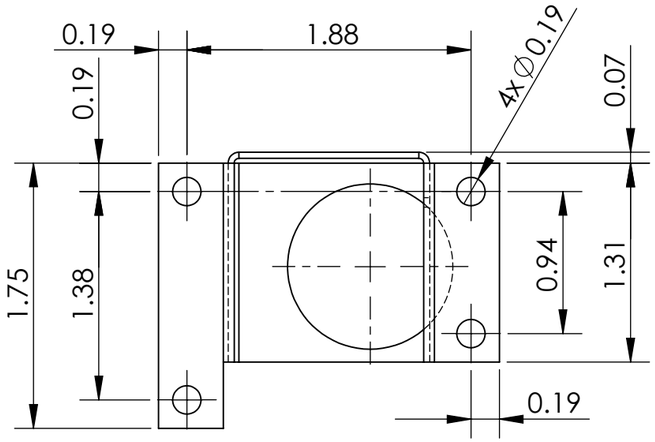

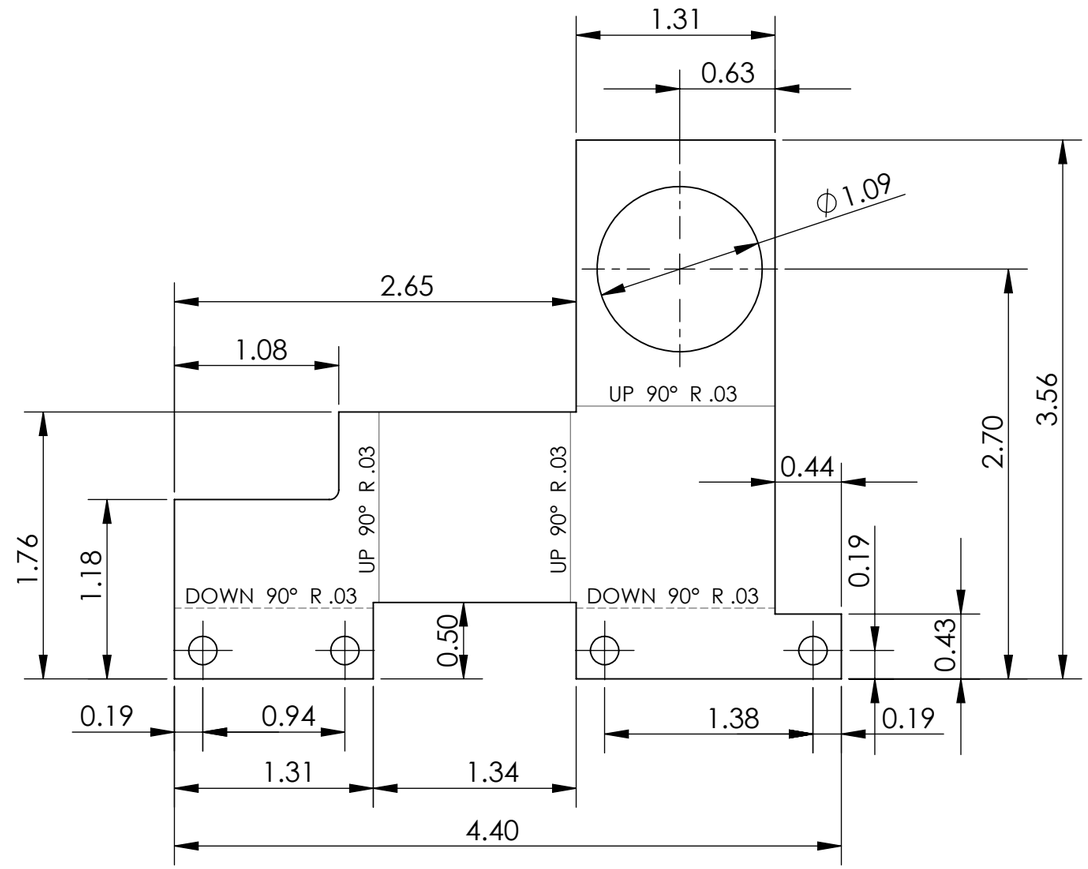

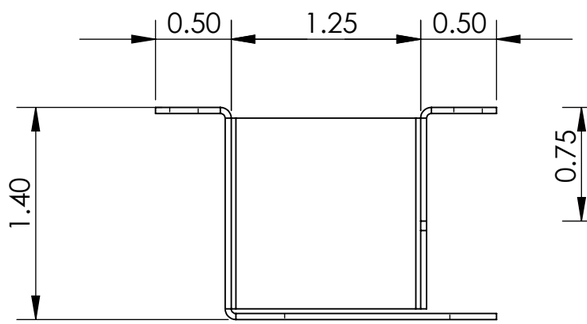

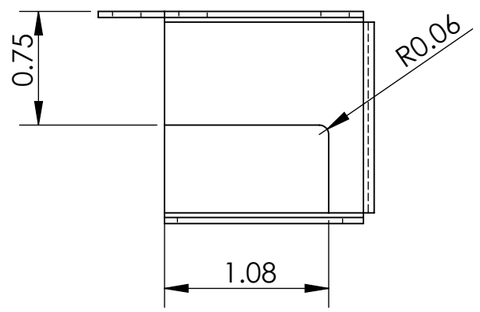

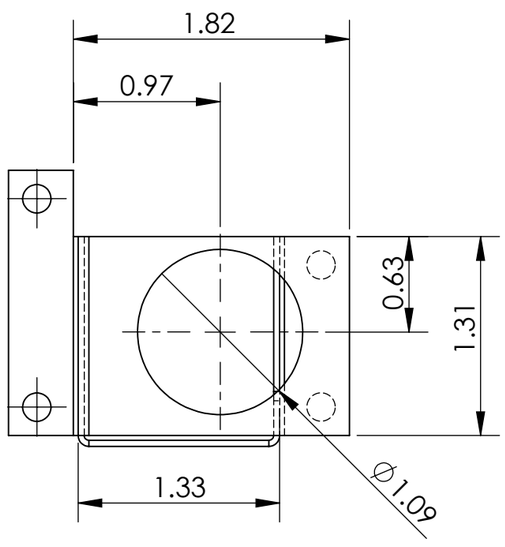

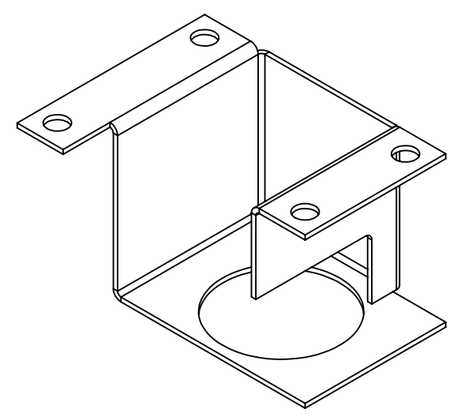

SHEET 1 OF 1

XXXXX	XXXX NO. USED ON	MODELED	
		DRAWN	
DRWG DATE	SCALE @ B-SIZE 1:1	CHKD	
DO NOT SCALE DRAWING		APPD.	
TOLERANCE: FRACTIONS ± 1/32, DECIMALS .00±.020 .000±.010, ANGULAR ± 1/2°		REPLACES	
FINISH		REPLACED BY	
MATERIAL SPEC. 18 GA STAINLESS			
NAME			
PART NUMBER TPG	M.ZERBA PB-PART		REV.