# Playfield - Metal Posts & Fin Shank Screws (Actual Size) †

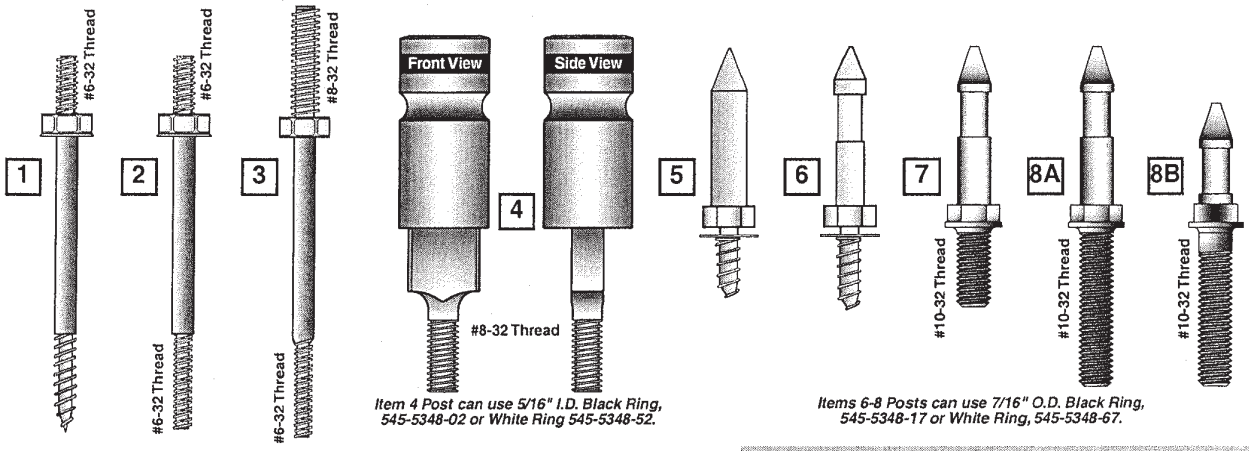


*Item 4 Post can use 5/16" I.D. Black Ring, 545-5348-02 or White Ring 545-5348-52.*

*Items 6-8 Posts can use 7/16" O.D. Black Ring, 545-5348-17 or White Ring, 545-5348-67.*

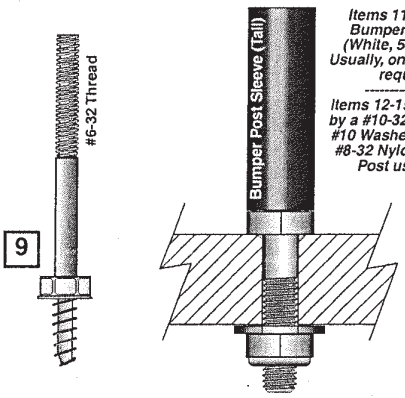


*Items 11-16 & 18 Posts can use a Black Bumper Post Sleeve (Tall), 545-5308-00 (White, 545-5308-08 or Red, 545-5308-22) Usually, only Posts which are in the ball path require a Bumper Post Sleeve.*

*Items 12-15 & 18 Posts are typically secured by a #10-32 Nylon Stop Nut, 240-5203-00 and #10 Washer, 242-5010-00 (Item 11 Post use a #8-32 Nylon Stop Nut, 240-5102-00; Item 16 Post use a #8-32 T-Nut, 240-5101-00).*

**A & B** *Items A & B Note: Typically used to secure Hex Spacers onto the Playfield Wood or Back Panel.*

**C** *Item C Note: Quantity 4 on bottom Cabinet Speaker Grill (Qty. 4) (also requires #6-32 Nylon Stop Nut, 240-5005-00).*

**D** *Item D Note: Quantity 3/per on the Coil Bracket Welded Assembly (515-5939-00) in the Bumper Bottom Assembly (515-6459-04).*

**A - D** *Items A-D Note: The "Fins" keep the screw from turning inside the wood hole.*

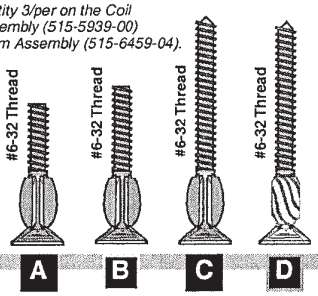


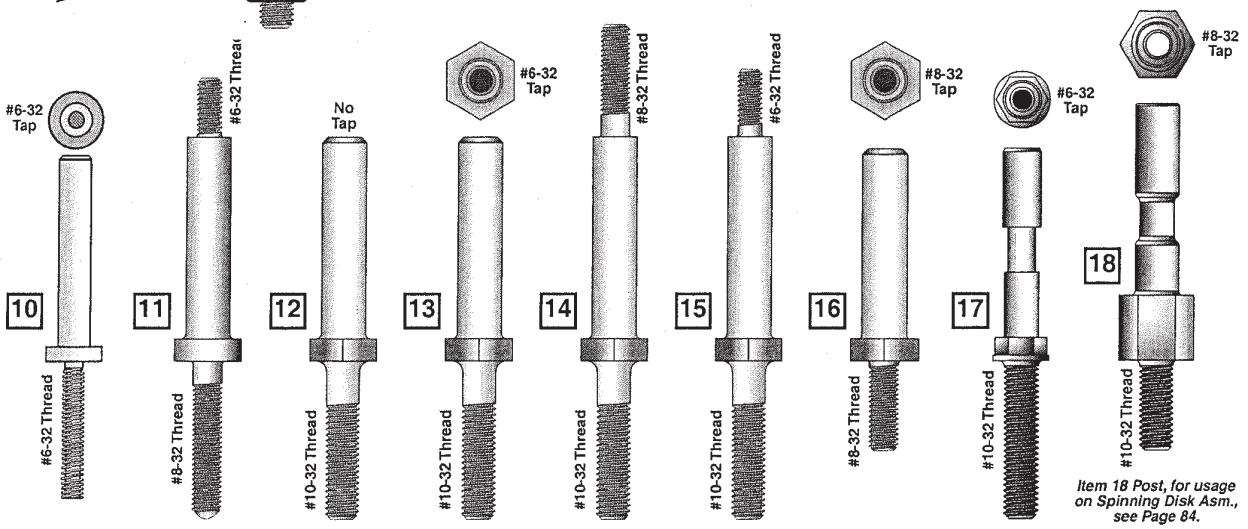


*Item 18 Post, for usage on Spinning Disk Asm., see Page 84.*

**Parts Identification**

| Nr. | METAL POSTS | SPI PART Nr. |
|---|---|---|
| 1 | Post [Fasten] #6-32 Thread // Wood Screw | 530-5010-02 |
| 2 | Post [Fasten] #6-32 Thread // #6-32 Thread | 530-5012-02 |
| 3 | Post [Fasten] #8-32 Thread // #6-32 Thread | 530-5008-00 |
| 4 | Post Brass [Adjustable, Sliding] #8-32 Thread | 530-5621-00 |
| 5 | Mini-Post Wood Screw (no cut-away) | 530-5004-01 |
| 6 | Mini-Post Wood Screw | 530-5004-00 |
| 7 | Mini-Post Machine Scr. // #10-32 .4" Thread | 530-5005-01 |
| 8A | Mini-Post MS // #10-32 .875" Thread | 530-5005-00 |
| 8B | Mini-Post Short MS // #10-32 .875" Thread | 530-5749-00 |
| 9 | Post [Fasten] #6-32 Thread // Wood Screw | 530-5263-01 |
| 10 | Post #6-32 Tap // #6-32 Thread | 530-5127-00 |
| 11 | Post [Fasten] #6-32 Thread // #8-32 Thread | 530-5007-00 |

| Nr. | METAL POSTS | SPI PART Nr. |
|---|---|---|
| 12 | Post [Hex Base] NO TAP // 10-32 Thread | 530-5332-00 |
| 13 | Post [Hex Bs.] #6-32 TAP // #10-32 Thread | 530-5332-01 |
| 14 | Post [Hex Bs.] #8-32 Thread // #10-32 Thr. | 530-5332-02 |
| 15 | Post [Hex Bs.] #6-32 Thread // #10-32 Thr. | 530-5332-03 |
| 16 | Post [Hex Bs.] #8-32 TAP // #8-32 Thread | 530-5332-04 |
| 17 | Post [Hex Bs.+Groove] #6-32 TAP // #10-32 Thr. | 530-5679-00 |
| 18 | Post [Hex Bs.+Groove] #8-32 TAP // #10-32 Thr. | 530-5753-00 |

| Nr. | FIN SHANK SCREWS | SPI PART Nr. |
|---|---|---|
| A | #6-32 X 3/4" Fin Shank Screw | 237-5921-02 |
| B | #6-32 X 7/8" Fin Shank Screw | 237-5921-04 |
| C | #6-32 X 1¼" Fin Shank Screw | 237-5883-00 |
| D | #6-32 X 1 3/16" Spiral Fin Shank Screw | 237-5957-00 |

P14

**NOT ALL PARTS LISTED ABOVE ARE USED ON THIS GAME (QUANTITIES PER GAME WILL DIFFER). COMPARE ACTUAL PART ON GAME TO ABOVE DRAWINGS TO IDENTIFY THE PART NUMBER REQUIRED.**