Backbox I/O Power Driver Board
(Coils Q1-Q32)
Detailed Wiring Diagram

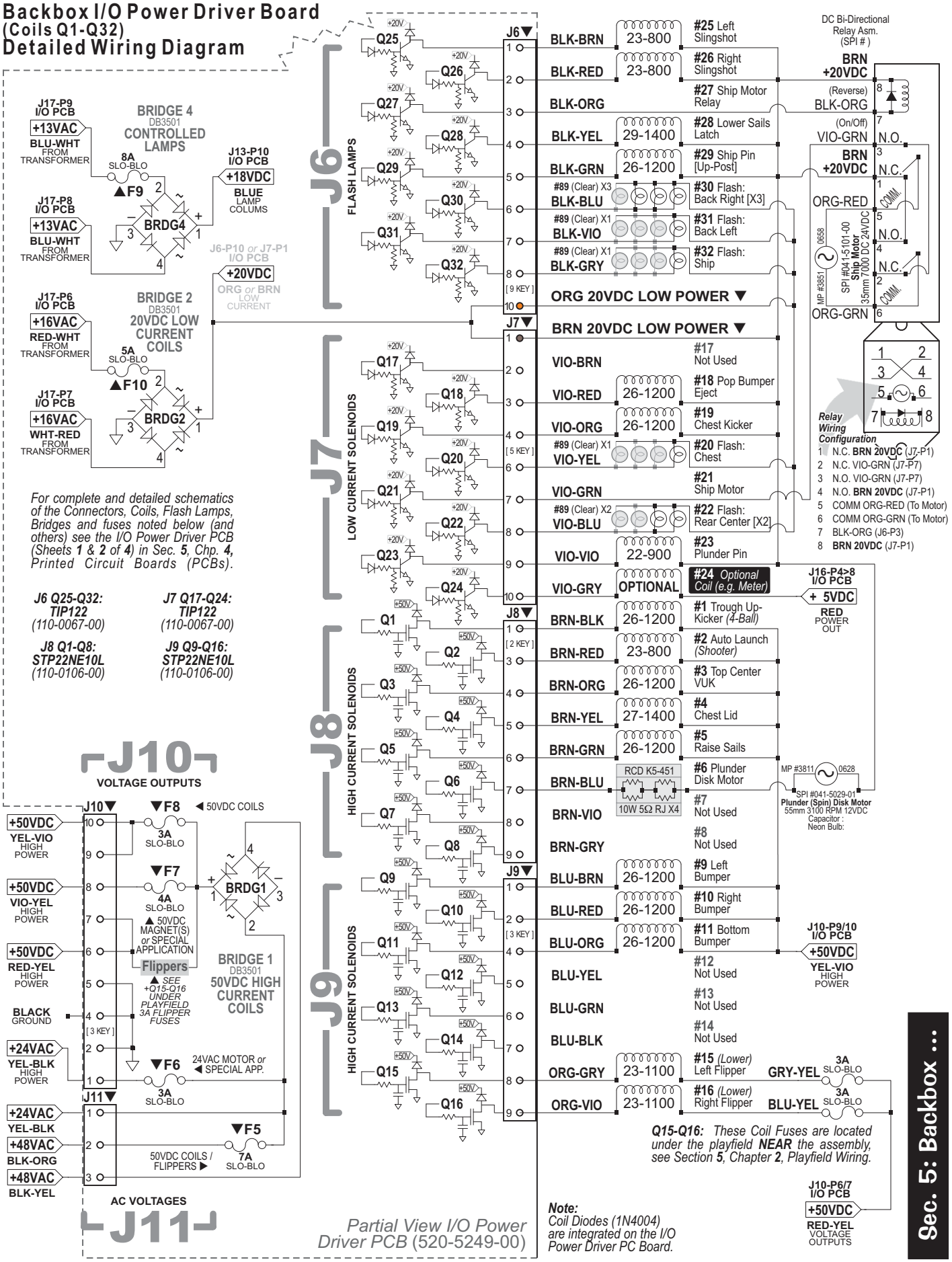

*For complete and detailed schematics of the Connectors, Coils, Flash Lamps, Bridges and fuses noted below (and others) see the I/O Power Driver PCB (Sheets **1** & **2** of **4**) in Sec. **5**, Chp. **4**, Printed Circuit Boards (PCBs).*

J6 Q25-Q32: ***TIP122*** *(110-0067-00)*	***J7 Q17-Q24:*** ***TIP122*** *(110-0067-00)*
J8 Q1-Q8: ***STP22NE10L*** *(110-0106-00)*	***J9 Q9-Q16:*** ***STP22NE10L*** *(110-0106-00)*

Q15-Q16: *These Coil Fuses are located under the playfield **NEAR** the assembly, see Section **5**, Chapter **2**, Playfield Wiring.*

Note: *Coil Diodes (1N4004) are integrated on the I/O Power Driver PC Board.*

Partial View I/O Power Driver PCB (520-5249-00)

Sec. 5: Backbox ...