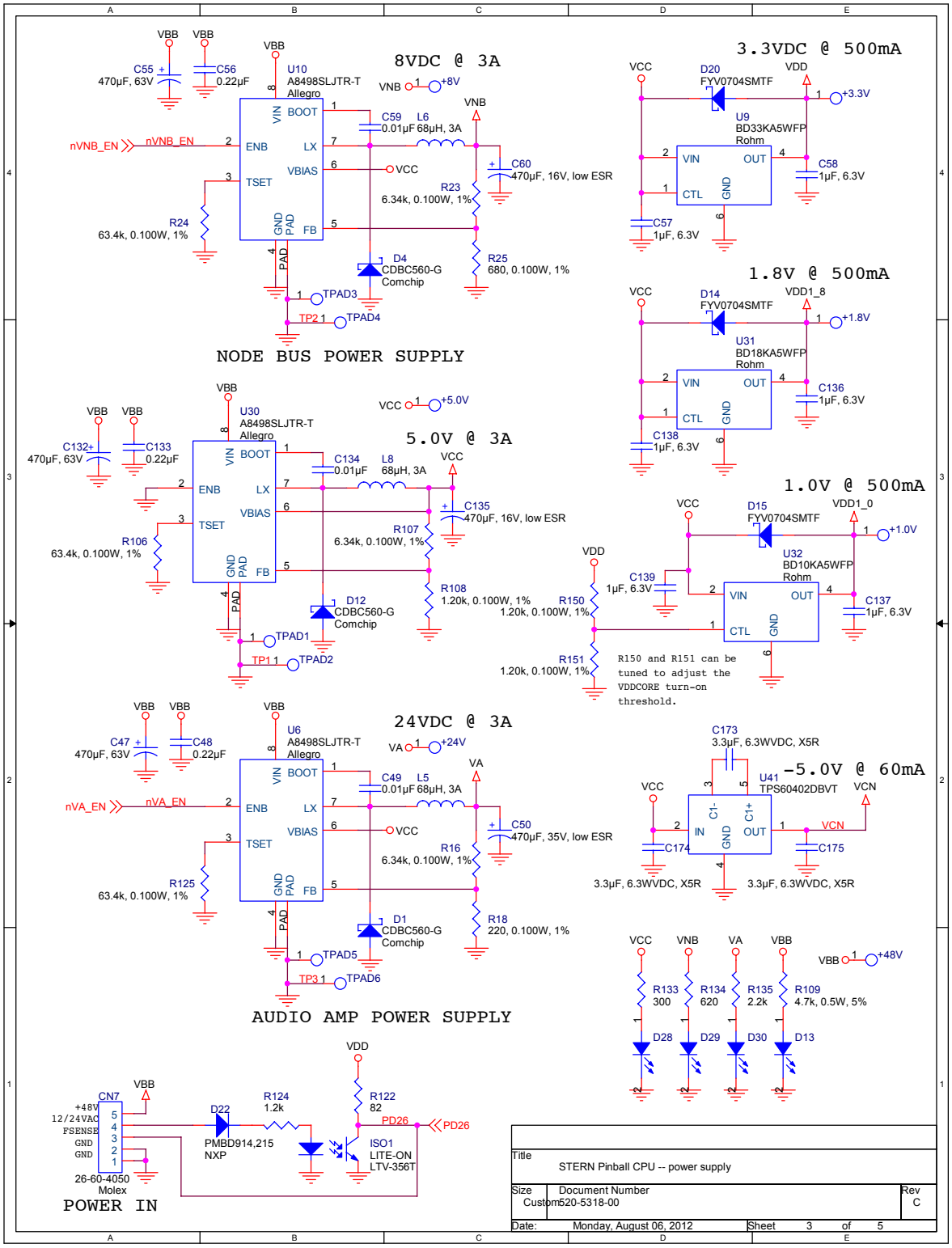
8VDC @ 3A
U10
A8498SLJTR-T
Allegro
VIN
BOOT
ENB
LX
TSET
VBIAS
GND
PAD
FB
C55
470µF, 63V
C56
0.22µF
C59
0.01µF
L6
68µH, 3A
C60
470µF, 16V, low ESR
R23
6.34k, 0.100W, 1%
R24
63.4k, 0.100W, 1%
R25
680, 0.100W, 1%
D4
CDBC560-G
Comchip
nVNB_EN
TPAD3
TPAD4
TP2
NODE BUS POWER SUPPLY
3.3VDC @ 500mA
D20
FYV0704SMTF
U9
BD33KA5WFP
Rohm
C58
1µF, 6.3V
C57
1µF, 6.3V
1.8V @ 500mA
D14
FYV0704SMTF
VDD1_8
U31
BD18KA5WFP
Rohm
C136
1µF, 6.3V
C138
1µF, 6.3V
5.0V @ 3A
U30
A8498SLJTR-T
Allegro
C132
470µF, 63V
C133
0.22µF
C134
0.01µF
L8
68µH, 3A
C135
470µF, 16V, low ESR
R106
63.4k, 0.100W, 1%
R107
6.34k, 0.100W, 1%
R108
1.20k, 0.100W, 1%
D12
CDBC560-G
Comchip
TPAD1
TPAD2
TP1
1.0V @ 500mA
D15
FYV0704SMTF
VDD1_0
U32
BD10KA5WFP
Rohm
C139
1µF, 6.3V
C137
1µF, 6.3V
R150
1.20k, 0.100W, 1%
R151
1.20k, 0.100W, 1%
R150 and R151 can be tuned to adjust the VDDCORE turn-on threshold.
24VDC @ 3A
U6
A8498SLJTR-T
Allegro
C47
470µF, 63V
C48
0.22µF
C49
0.01µF
L5
68µH, 3A
C50
470µF, 35V, low ESR
R16
6.34k, 0.100W, 1%
R125
63.4k, 0.100W, 1%
R18
220, 0.100W, 1%
D1
CDBC560-G
Comchip
nVA_EN
TPAD5
TPAD6
TP3
AUDIO AMP POWER SUPPLY
-5.0V @ 60mA
C173
3.3µF, 6.3WVDC, X5R
U41
TPS60402DBVT
C1-
C1+
IN
GND
OUT
C174
3.3µF, 6.3WVDC, X5R
C175
3.3µF, 6.3WVDC, X5R
VCN
R133
300
R134
620
R135
2.2k
R109
4.7k, 0.5W, 5%
D28
D29
D30
D13
CN7
+48V
12/24VAC
FSENSE
GND
GND
26-60-4050
Molex
POWER IN
D22
PMBD914,215
NXP
R124
1.2k
R122
82
ISO1
LITE-ON
LTV-356T
PD26
Title
STERN Pinball CPU -- power supply
Size
Custom
Document Number
520-5318-00
Rev
C
Date:
Monday, August 06, 2012
Sheet
3
of
5

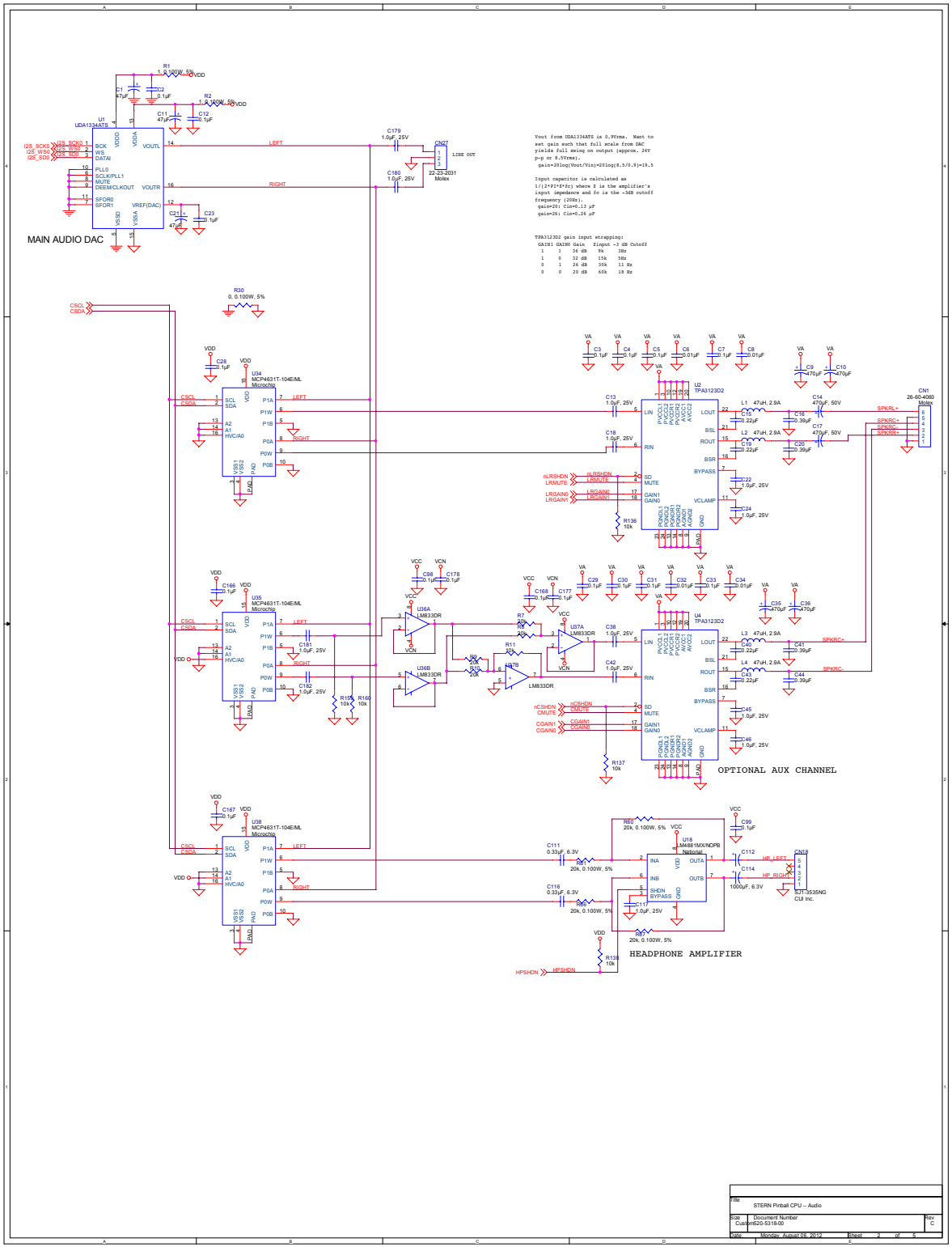

Title	STERN Pinball CPU – Audio
Size	Document Number: Custom 520-5318-00 — Rev C
Date:	Monday, August 06, 2012
Sheet	2 of 5

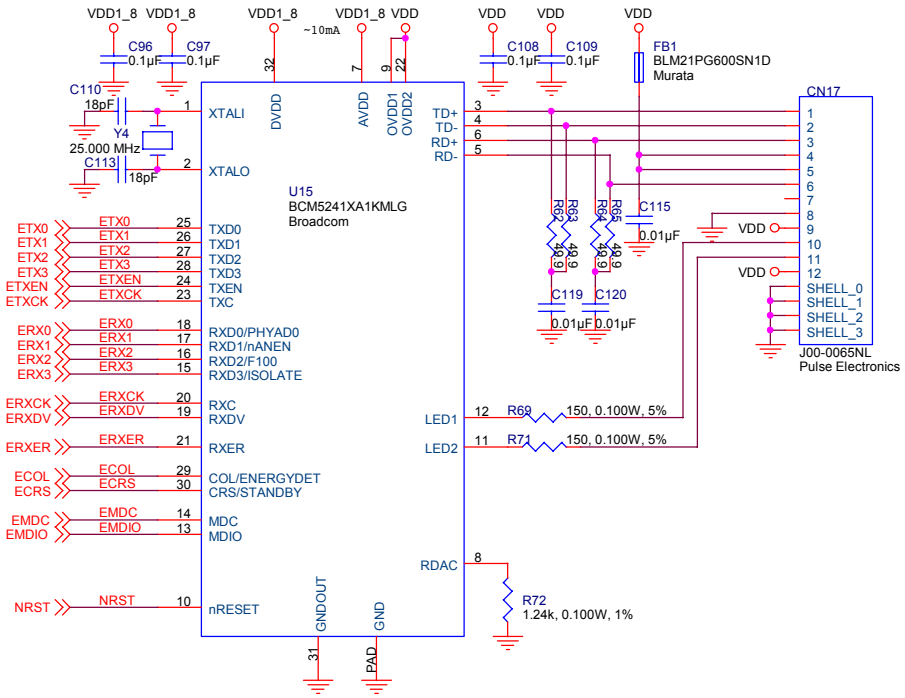

Title	STERN Pinball CPU -- Ethernet	
Size Custom	Document Number 520-5318-00	Rev C
Date: Monday, August 06, 2012	Sheet 4 of 5	

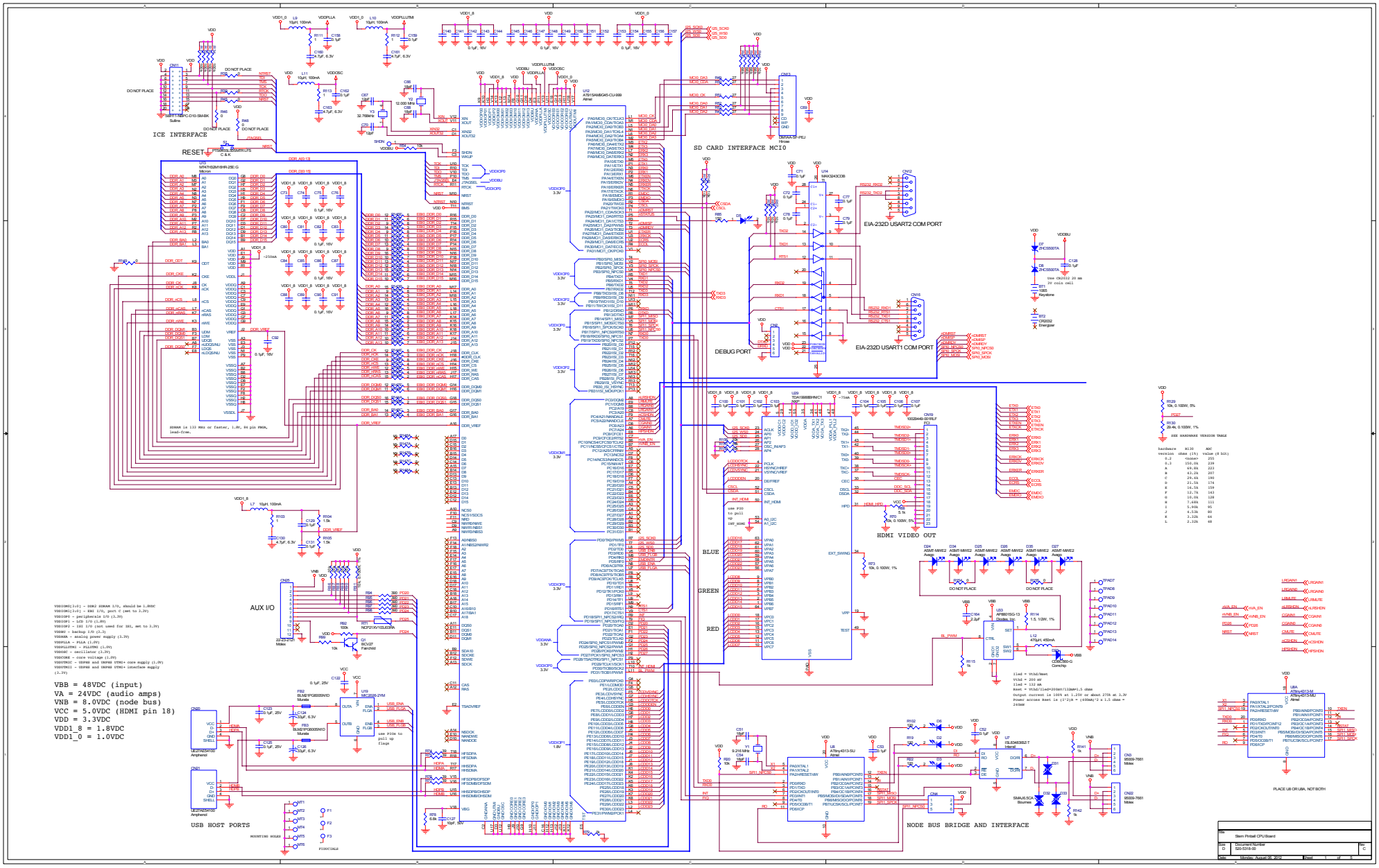
ICE INTERFACE
RESET
SD CARD INTERFACE MCI0
EIA-232D USART2 COM PORT
EIA-232D USART1 COM PORT
DEBUG PORT
HDMI VIDEO OUT
AUX I/O
USB HOST PORTS
NODE BUS BRIDGE AND INTERFACE
BLUE
GREEN
RED
VDD = 48VDC (input)
VA = 24VDC (audio amps)
VNB = 8.0VDC (node bus)
VCC = 5.0VDC (HDMI pin 18)
VDD = 3.3VDC
VDD1_8 = 1.8VDC
VDD1_0 = 1.0VDC
Stem Pinball CPU Board
Document Number
520-5318-00
Rev C
Monday, August 06, 2012
Sheet 1 of 8

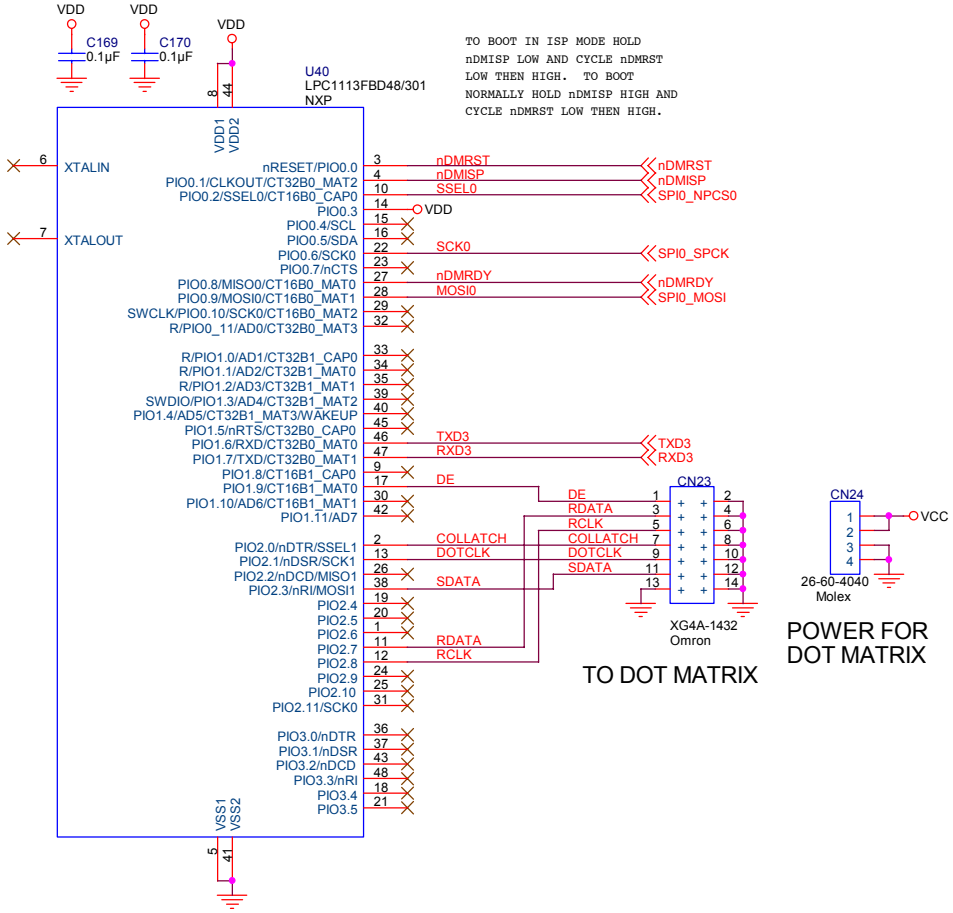

Title	CPU	
Size Custom	Document Number 520-5318-00	Rev C
Date: Monday, August 06, 2012	Sheet 5 of 5	