50032-CAB
Cabinet Assembly

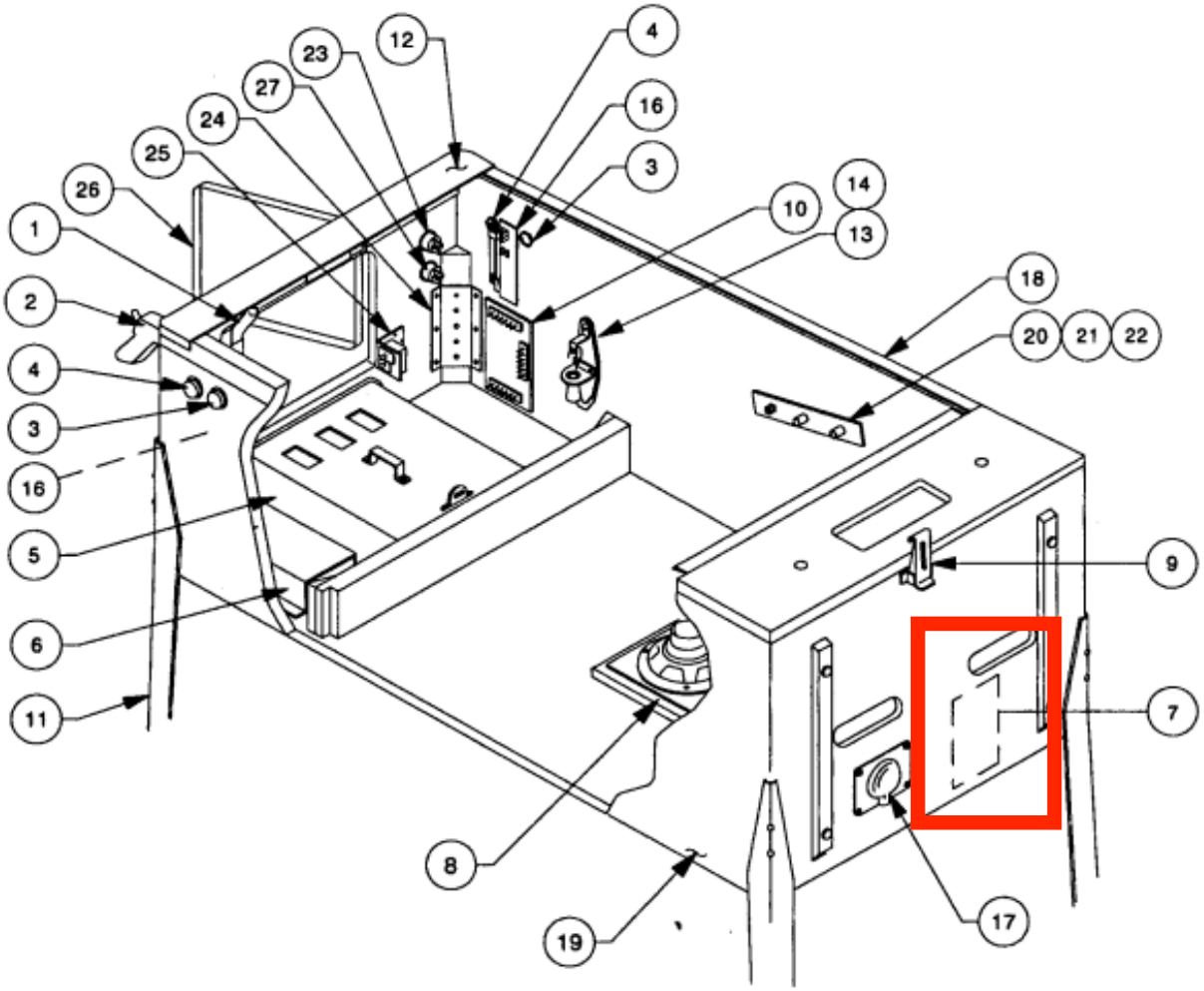

Item	Part Number	Description
1	A-16773-1	Lever Guide Assembly
2	A-18536	Gun Assembly
3	A-16883-1	Flipper Button, Blue (2)
4	A-16883-4	Flipper Button, Red(2)
5	A-17900-1	5-Ball Cashhbox Assembly
6	A-17540	Univ. Power Interface Assy.
7	5610-13953-00	WPC Transformer
8	5555-12929-00	Speaker, 4Ω, 6", 25w
9	20-9347	Toggle Latch
10	A-17051-1	Coin Door Interface Board
11	A-19514	Leg Assembly, Chrome
12	D-12615	Front Molding Assembly
13	20-6502-A	Plum Bob
14	A-15361	Tilt Mechanism Assembly
15	*	Cordset
16	A-17316	Opto Flipper Assembly (2)
17	01-10714	Line Cord Cover
18	A-12359-3	Side Molding Assembly (2)
19	11-1209	Wood Cabinet
20	01-11408	Plate Spacer (2)
21	02-4329-2	Pivot Nut, 11/16" (4)
22	02-4352	Pivot Bushing (2)
23	20-9663-1	Push Button w/Sw., Start
24	01-11400	Leg Plate (4)
25	A-18249-1	Cable & Interlock Switch Assy.
26	09-61000-1	Coin Door-USA
27	20-9663-9	Push Button w/Sw., Extra Ball

♦ Miscellaneous

A-17195	Tilt Switch Assy. w/Cable
A-19562.1	Stay Arm Assembly
01-12352	Clip Bracket
01-9011-L	Backbox Mtg. Bracket, Left
01-9011-R	Backbox Mtg. Bracket, Right
08-7028-T	Playfield Glass
08-7377	Leg Leveler Adjuster, 3"
20-6500	Steel Ball, 1-1/16" (5)

* See Application Chart p.2-35.